EXPERT TUITION

Maths Questions By Topic:

Moments

A-Level Edexcel

0207 060 4494
www.expert-tuition.co.uk
online.expert-tuition.co.uk
enquiries@expert-tuition.co.uk
The Foundry, 77 Fulham Palace Road, W6 8JA

Table Of Contents

New Spec

Paper 3 (A2) ..... Page 1

Old Spec

Mechanics 1 ..... Page 29

Mechanics 2 ..... Page 69

1.

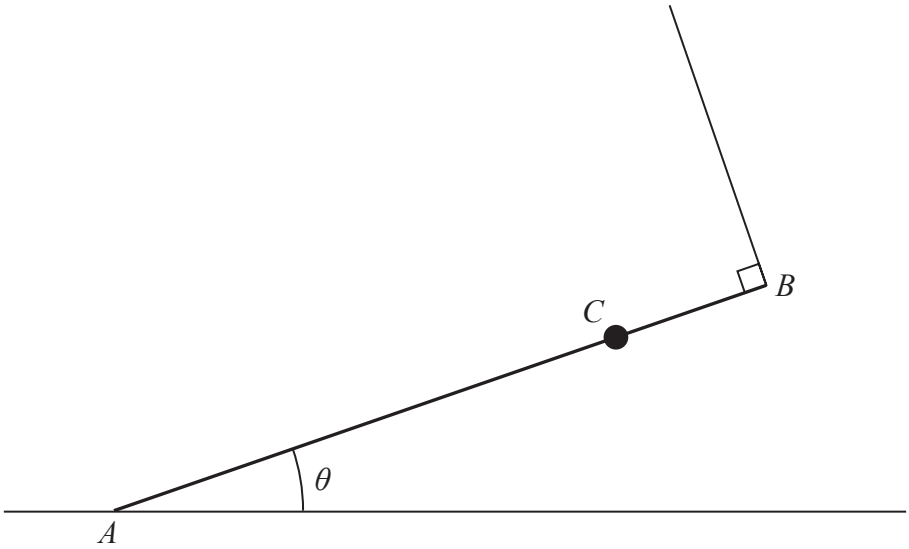

Figure 2

A uniform rod AB has mass M and length $2a$

A particle of mass $2M$ is attached to the rod at the point C, where $AC = 1.5a$

The rod rests with its end A on rough horizontal ground.

The rod is held in equilibrium at an angle θ to the ground by a light string that is attached to the end B of the rod.

The string is perpendicular to the rod, as shown in Figure 2.

(a) Explain why the frictional force acting on the rod at A acts horizontally to the right on the diagram.

(1)

The tension in the string is T

(b) Show that $T = 2Mg\cos\theta$

(3)

Given that $\cos\theta = \dfrac{3}{5}$

(c) show that the magnitude of the vertical force exerted by the ground on the rod at A is $\dfrac{57Mg}{25}$

(3)

The coefficient of friction between the rod and the ground is μ

Given that the rod is in limiting equilibrium,

(d) show that $\mu = \dfrac{8}{19}$

(4)

EXPERT TUITION

Question 1 continued

EXPERT TUITION

Question 1 continued

EXPERT TUITION

Question 1 continued

(Total for Question 1 is 11 marks)

EXPERT TUITION

2.

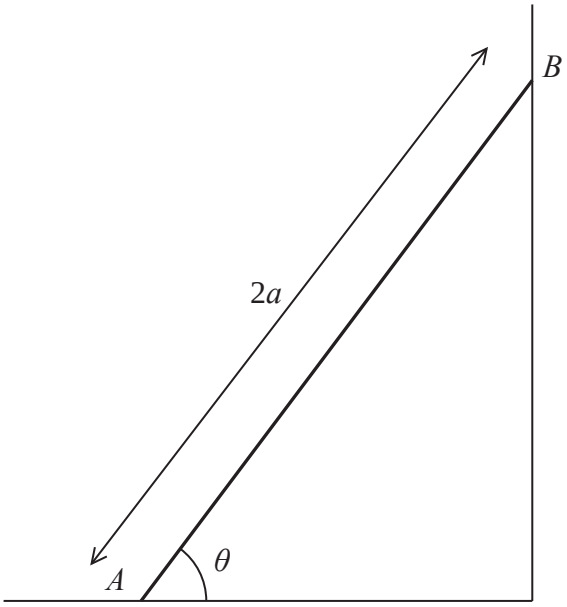

Figure 2

A beam AB has mass m and length $2a$.

The beam rests in equilibrium with A on rough horizontal ground and with B against a smooth vertical wall.

The beam is inclined to the horizontal at an angle θ, as shown in Figure 2.

The coefficient of friction between the beam and the ground is μ

The beam is modelled as a uniform rod resting in a vertical plane that is perpendicular to the wall.

Using the model,

(a) show that $\mu \geqslant \frac{1}{2}\cot\theta$

(5)

A horizontal force of magnitude kmg, where k is a constant, is now applied to the beam at A.

This force acts in a direction that is perpendicular to the wall and towards the wall.

Given that $\tan\theta = \frac{5}{4}$, $\mu = \frac{1}{2}$ and the beam is now in limiting equilibrium,

(b) use the model to find the value of k.

(5)

EXPERT TUITION

Question 2 continued

EXPERT TUITION

Question 2 continued

EXPERT TUITION

Question 2 continued

(Total for Question 2 is 10 marks)

EXPERT TUITION

3.

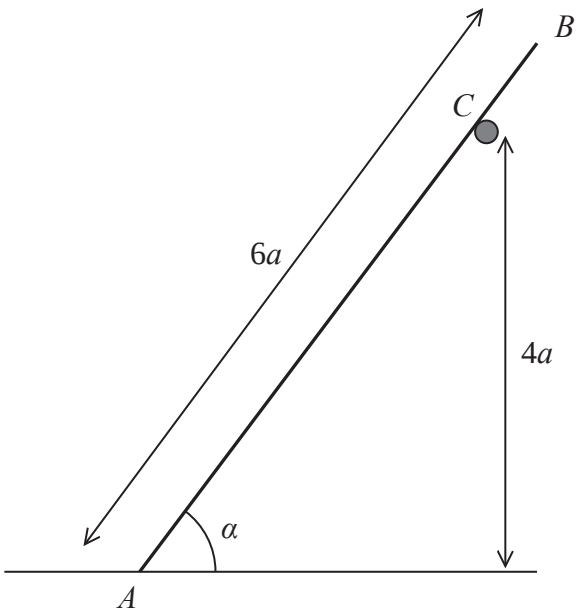

Figure 1

A ladder AB has mass M and length $6a$.

The end A of the ladder is on rough horizontal ground.

The ladder rests against a fixed smooth horizontal rail at the point C.

The point C is at a vertical height $4a$ above the ground.

The vertical plane containing AB is perpendicular to the rail.

The ladder is inclined to the horizontal at an angle α, where $\sin\alpha = \frac{4}{5}$, as shown in Figure 1.

The coefficient of friction between the ladder and the ground is μ.

The ladder rests in limiting equilibrium.

The ladder is modelled as a uniform rod.

Using the model,

(a) show that the magnitude of the force exerted on the ladder by the rail at C is $\frac{9Mg}{25}$

(3)

(b) Hence, or otherwise, find the value of μ.

(7)

EXPERT TUITION

Question 3 continued

EXPERT TUITION

Question 3 continued

EXPERT TUITION

Question 3 continued

(Total for Question 3 is 10 marks)

EXPERT TUITION

4.

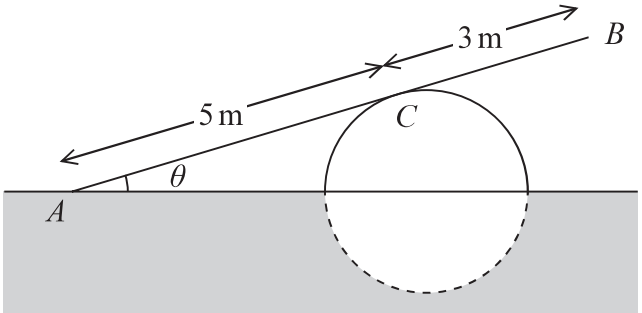

Figure 2

A ramp, AB, of length 8 m and mass 20 kg, rests in equilibrium with the end A on rough horizontal ground.

The ramp rests on a smooth solid cylindrical drum which is partly under the ground. The drum is fixed with its axis at the same horizontal level as A.

The point of contact between the ramp and the drum is C, where $AC = 5$ m, as shown in Figure 2.

The ramp is resting in a vertical plane which is perpendicular to the axis of the drum, at an angle θ to the horizontal, where $\tan\theta = \frac{7}{24}$

The ramp is modelled as a uniform rod.

(a) Explain why the reaction from the drum on the ramp at point C acts in a direction which is perpendicular to the ramp.

(1)

(b) Find the magnitude of the resultant force acting on the ramp at A.

(9)

The ramp is still in equilibrium in the position shown in Figure 2 but the ramp is not now modelled as being uniform.

Given that the centre of mass of the ramp is assumed to be closer to A than to B,

(c) state how this would affect the magnitude of the normal reaction between the ramp and the drum at C.

(1)

EXPERT TUITION

Question 4 continued

EXPERT TUITION

Question 4 continued

EXPERT TUITION

Question 4 continued

(Total for Question 4 is 11 marks)

EXPERT TUITION

5.

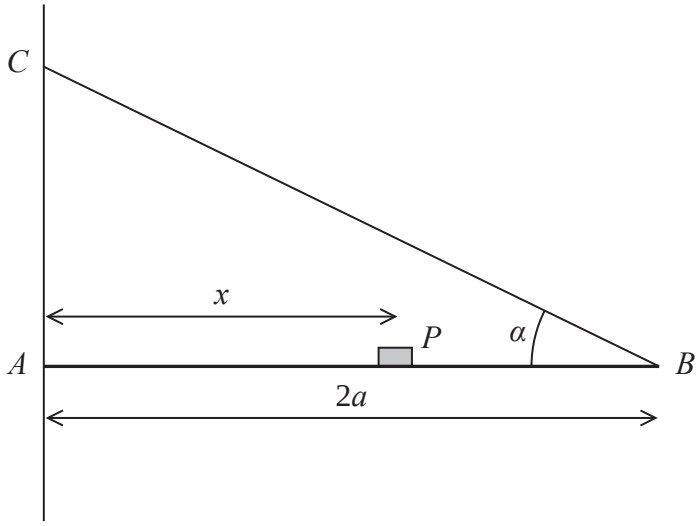

Figure 3

A plank, AB, of mass M and length $2a$, rests with its end A against a rough vertical wall. The plank is held in a horizontal position by a rope. One end of the rope is attached to the plank at B and the other end is attached to the wall at the point C, which is vertically above A.

A small block of mass $3M$ is placed on the plank at the point P, where $AP = x$. The plank is in equilibrium in a vertical plane which is perpendicular to the wall.

The angle between the rope and the plank is α, where $\tan\alpha = \frac{3}{4}$, as shown in Figure 3.

The plank is modelled as a uniform rod, the block is modelled as a particle and the rope is modelled as a light inextensible string.

(a) Using the model, show that the tension in the rope is $\frac{5Mg(3x + a)}{6a}$

(3)

The magnitude of the horizontal component of the force exerted on the plank at A by the wall is $2Mg$.

(b) Find x in terms of a.

(2)

The force exerted on the plank at A by the wall acts in a direction which makes an angle β with the horizontal.

(c) Find the value of $\tan\beta$

(5)

The rope will break if the tension in it exceeds $5Mg$.

(d) Explain how this will restrict the possible positions of P. You must justify your answer carefully.

(3)

EXPERT TUITION

Question 5 continued

EXPERT TUITION

Question 5 continued

EXPERT TUITION

Question 5 continued

(Total for Question 5 is 13 marks)

EXPERT TUITION

6.

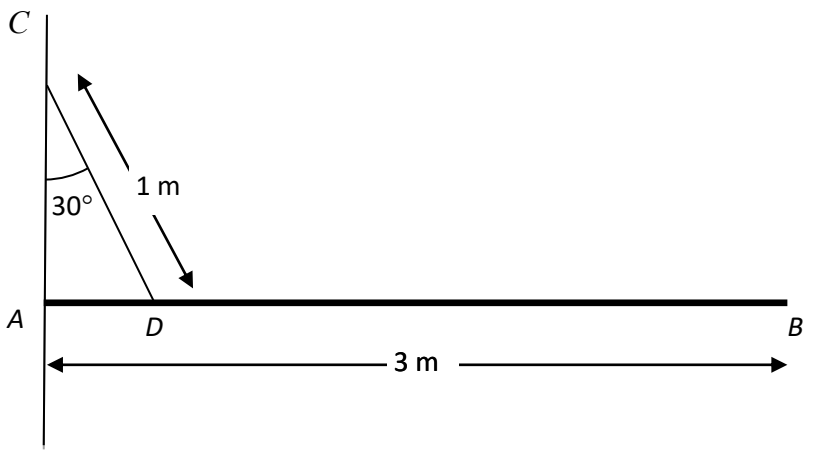

Figure 2

A beam AB, of mass 20 kg and length 3 m, is smoothly hinged to a vertical wall at one end A.

The beam is held in equilibrium in a horizontal position by a rope of length 1 m. One end of the rope is fixed to a point C on the wall which is vertically above A. The other end of the rope is fixed to the point D on the beam so that angle ACD is 30°, as shown in Figure 2. The beam is modelled as a uniform rod and the rope is modelled as a light inextensible string.

Using the model, find

(a) the tension in the rope,

(4)

(b) the direction of the force exerted by the wall on the beam at A.

(6)

(c) If the rope were not modelled as being light, state how this would affect the tension in the rope, explaining your answer carefully.

(2)

The rope is now removed and replaced by a longer rope which is still attached to the wall at C but is now attached to the beam at G, where G is the midpoint of AB. The beam AB remains in equilibrium in a horizontal position.

(d) Show that the force exerted by the wall on the beam at A now acts horizontally.

(2)

EXPERT TUITION

Question 6 continued

EXPERT TUITION

Question 6 continued

EXPERT TUITION

Question 6 continued

(Total for Question 6 is 14 marks)

EXPERT TUITION

7.

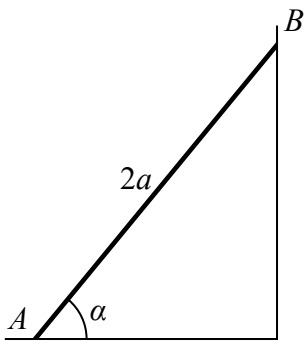

Figure 1

A uniform ladder AB, of length $2a$ and weight W, has its end A on rough horizontal ground.

The coefficient of friction between the ladder and the ground is $\frac{1}{4}$.

The end B of the ladder is resting against a smooth vertical wall, as shown in Figure 1.

A builder of weight $7W$ stands at the top of the ladder.
To stop the ladder from slipping, the builder's assistant applies a horizontal force of magnitude P to the ladder at A, towards the wall.
The force acts in a direction which is perpendicular to the wall.

The ladder rests in equilibrium in a vertical plane perpendicular to the wall and makes an angle α with the horizontal ground, where $\tan \alpha = \frac{5}{2}$.

The builder is modelled as a particle and the ladder is modelled as a uniform rod.

(a) Show that the reaction of the wall on the ladder at B has magnitude $3W$.

(5)

(b) Find, in terms of W, the range of possible values of P for which the ladder remains in equilibrium.

(5)

Often in practice, the builder's assistant will simply stand on the bottom of the ladder.

(c) Explain briefly how this helps to stop the ladder from slipping.

(3)

EXPERT TUITION

Question 7 continued

EXPERT TUITION

Question 7 continued

EXPERT TUITION

Question 7 continued

(Total for Question 7 is 13 marks)

EXPERT TUITION

Leave blank

8.

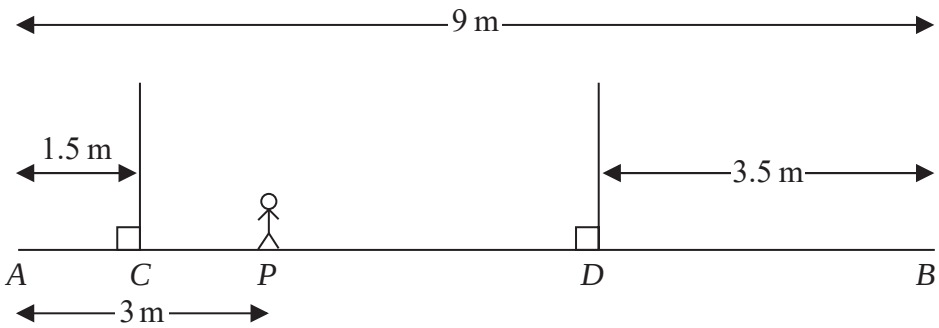

Figure 2

A wooden beam AB, of mass 150 kg and length 9 m, rests in a horizontal position supported by two vertical ropes. The ropes are attached to the beam at C and D, where $AC = 1.5$ m and $BD = 3.5$ m. A gymnast of mass 60 kg stands on the beam at the point P, where $AP = 3$ m, as shown in Figure 2. The beam remains horizontal and in equilibrium.

By modelling the gymnast as a particle, the beam as a uniform rod and the ropes as light inextensible strings,

(a) find the tension in the rope attached to the beam at C.

(3)

The gymnast at P remains on the beam at P and another gymnast, who is also modelled as a particle, stands on the beam at B. The beam remains horizontal and in equilibrium. The mass of the gymnast at B is the largest possible for which the beam remains horizontal and in equilibrium.

(b) Find the tension in the rope attached to the beam at D.

(4)

EXPERT TUITION

Leave blank

Question 8 continued

EXPERT TUITION

Leave blank

Question 8 continued

EXPERT TUITION

Leave blank

Question 8 continued

(Total 7 marks)

EXPERT TUITION

Leave blank

9. A plank AB has length 6 m and mass 30 kg. The point C is on the plank with $CB = 2$ m. The plank rests in equilibrium in a horizontal position on supports at A and C. Two people, each of mass 75 kg, stand on the plank. One person stands at the point P of the plank, where $AP = x$ metres, and the other person stands at the point Q of the plank, where $AQ = 2x$ metres. The plank remains horizontal and in equilibrium with the magnitude of the reaction at C five times the magnitude of the reaction at A. The plank is modelled as a uniform rod and each person is modelled as a particle.

(a) Find the value of x.

(7)

(b) State two ways in which you have used the assumptions made in modelling the plank as a uniform rod.

(2)

EXPERT TUITION

Leave blank

Question 9 continued

EXPERT TUITION

Leave blank

Question 9 continued

EXPERT TUITION

Leave blank

Question 9 continued

(Total 9 marks)

EXPERT TUITION

Leave blank

10. A non-uniform plank AB has length 6 m and mass 30 kg. The plank rests in equilibrium in a horizontal position on supports at the points S and T of the plank where $AS = 0.5$ m and $TB = 2$ m.

When a block of mass M kg is placed on the plank at A, the plank remains horizontal and in equilibrium and the plank is on the point of tilting about S.

When the block is moved to B, the plank remains horizontal and in equilibrium and the plank is on the point of tilting about T.

The distance of the centre of mass of the plank from A is d metres. The block is modelled as a particle and the plank is modelled as a non-uniform rod. Find

(i) the value of d,

(ii) the value of M.

(7)

EXPERT TUITION

Leave blank

Question 10 continued

(Total 7 marks)

EXPERT TUITION

Leave blank

11.

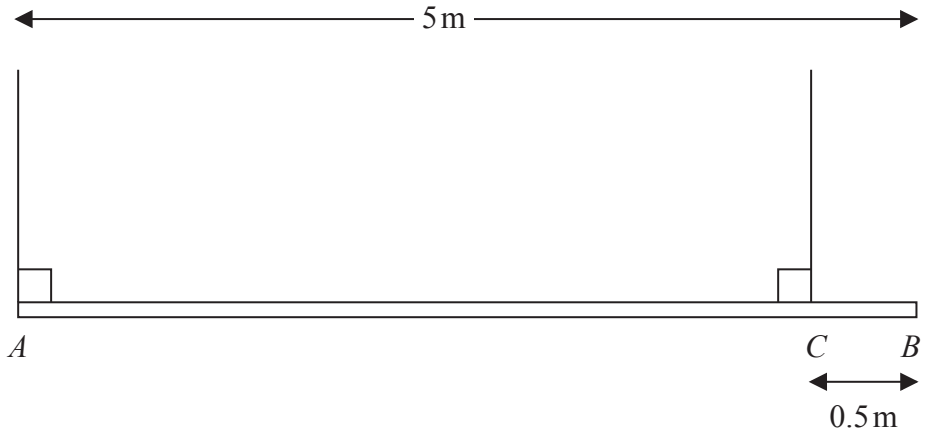

Figure 3

A beam AB has length 5 m and mass 25 kg. The beam is suspended in equilibrium in a horizontal position by two vertical ropes. One rope is attached to the beam at A and the other rope is attached to the point C on the beam where $CB = 0.5$ m, as shown in Figure 3. A particle P of mass 60 kg is attached to the beam at B and the beam remains in equilibrium in a horizontal position. The beam is modelled as a uniform rod and the ropes are modelled as light strings.

(a) Find

(i) the tension in the rope attached to the beam at A,

(ii) the tension in the rope attached to the beam at C.

(6)

Particle P is removed and replaced by a particle Q of mass M kg at B. Given that the beam remains in equilibrium in a horizontal position,

(b) find

(i) the greatest possible value of M,

(ii) the greatest possible tension in the rope attached to the beam at C.

(6)

EXPERT TUITION

Leave blank

Question 11 continued

(Total 12 marks)

EXPERT TUITION

Leave blank

12.

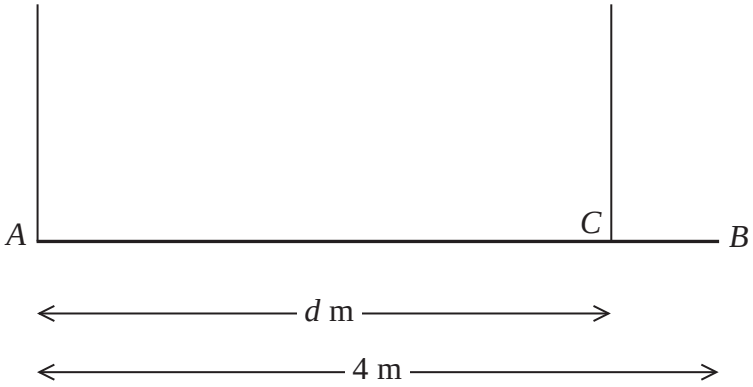

Figure 3

A beam AB has weight W newtons and length 4 m. The beam is held in equilibrium in a horizontal position by two vertical ropes attached to the beam. One rope is attached to A and the other rope is attached to the point C on the beam, where $AC = d$ metres, as shown in Figure 3. The beam is modelled as a uniform rod and the ropes as light inextensible strings. The tension in the rope attached at C is double the tension in the rope attached at A.

(a) Find the value of d.

(6)

A small load of weight kW newtons is attached to the beam at B. The beam remains in equilibrium in a horizontal position. The load is modelled as a particle. The tension in the rope attached at C is now four times the tension in the rope attached at A.

(b) Find the value of k.

(6)

EXPERT TUITION

Leave blank

Question 12 continued

(Total 12 marks)

EXPERT TUITION

Leave blank

13.

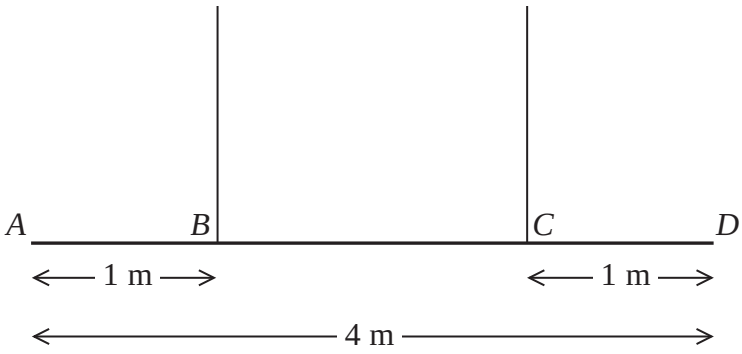

Figure 3

A non-uniform beam AD has weight W newtons and length 4 m. It is held in equilibrium in a horizontal position by two vertical ropes attached to the beam. The ropes are attached to two points B and C on the beam, where $AB = 1$ m and $CD = 1$ m, as shown in Figure 3. The tension in the rope attached to C is double the tension in the rope attached to B. The beam is modelled as a rod and the ropes are modelled as light inextensible strings.

(a) Find the distance of the centre of mass of the beam from A.

(6)

A small load of weight kW newtons is attached to the beam at D. The beam remains in equilibrium in a horizontal position. The load is modelled as a particle.

Find

(b) an expression for the tension in the rope attached to B, giving your answer in terms of k and W,

(3)

(c) the set of possible values of k for which both ropes remain taut.

(2)

EXPERT TUITION

Leave blank

Question 13 continued

(Total 11 marks)

EXPERT TUITION

Leave blank

14. A beam AB has length 15 m. The beam rests horizontally in equilibrium on two smooth supports at the points P and Q, where $AP = 2$ m and $QB = 3$ m. When a child of mass 50 kg stands on the beam at A, the beam remains in equilibrium and is on the point of tilting about P. When the same child of mass 50 kg stands on the beam at B, the beam remains in equilibrium and is on the point of tilting about Q. The child is modelled as a particle and the beam is modelled as a non-uniform rod.

(a) (i) Find the mass of the beam.

(ii) Find the distance of the centre of mass of the beam from A.

(8)

When the child stands at the point X on the beam, it remains horizontal and in equilibrium. Given that the reactions at the two supports are equal in magnitude,

(b) find AX.

(6)

EXPERT TUITION

Leave blank

Question 14 continued

(Total 14 marks)

EXPERT TUITION

Leave blank

15.

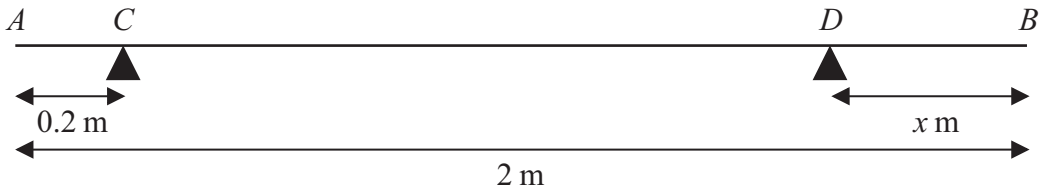

Figure 5

A uniform rod AB has length 2 m and mass 50 kg. The rod is in equilibrium in a horizontal position, resting on two smooth supports at C and D, where $AC = 0.2$ metres and $DB = x$ metres, as shown in Figure 5. Given that the magnitude of the reaction on the rod at D is twice the magnitude of the reaction on the rod at C,

(a) find the value of x.

(6)

The support at D is now moved to the point E on the rod, where $EB = 0.4$ metres. A particle of mass m kg is placed on the rod at B, and the rod remains in equilibrium in a horizontal position. Given that the magnitude of the reaction on the rod at E is four times the magnitude of the reaction on the rod at C,

(b) find the value of m.

(7)

EXPERT TUITION

Leave blank

Question 15 continued

(Total 13 marks)

EXPERT TUITION

Leave blank

16. A steel girder AB, of mass 200 kg and length 12 m, rests horizontally in equilibrium on two smooth supports at C and at D, where $AC = 2$ m and $DB = 2$ m. A man of mass 80 kg stands on the girder at the point P, where $AP = 4$ m, as shown in Figure 1.

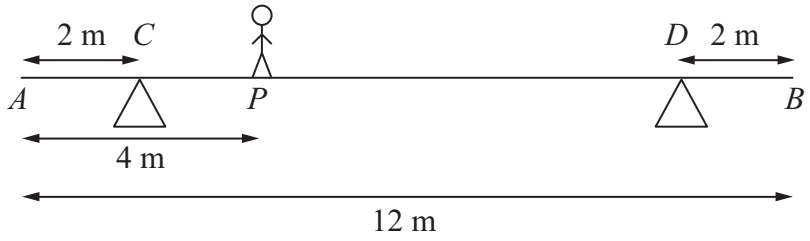

Figure 1

The man is modelled as a particle and the girder is modelled as a uniform rod.

(a) Find the magnitude of the reaction on the girder at the support at C.

(3)

The support at D is now moved to the point X on the girder, where $XB = x$ metres. The man remains on the girder at P, as shown in Figure 2.

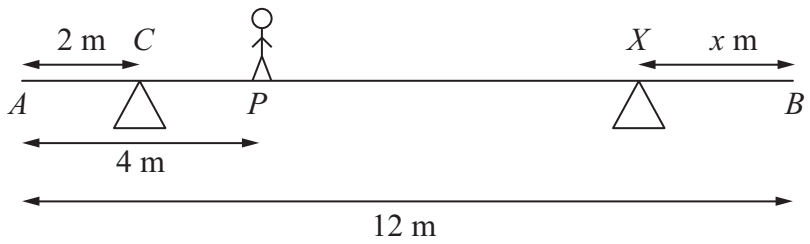

Figure 2

Given that the magnitudes of the reactions at the two supports are now equal and that the girder again rests horizontally in equilibrium, find

(b) the magnitude of the reaction at the support at X,

(2)

(c) the value of x.

(4)

EXPERT TUITION

Leave blank

Question 16 continued

(Total 9 marks)

EXPERT TUITION

Leave blank

17.

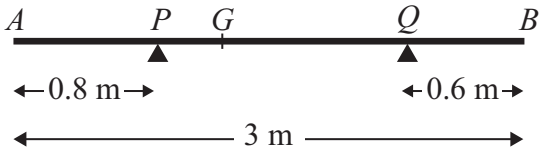

Figure 1

A non-uniform rod AB has length 3 m and mass 4.5 kg. The rod rests in equilibrium, in a horizontal position, on two smooth supports at P and at Q, where $AP = 0.8$ m and $QB = 0.6$ m, as shown in Figure 1. The centre of mass of the rod is at G. Given that the magnitude of the reaction of the support at P on the rod is twice the magnitude of the reaction of the support at Q on the rod, find

(a) the magnitude of the reaction of the support at Q on the rod,

(3)

(b) the distance AG.

(4)

(Total 7 marks)

EXPERT TUITION

Leave blank

18.

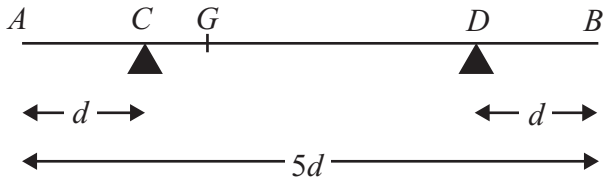

Figure 1

A non-uniform rod AB, of mass m and length $5d$, rests horizontally in equilibrium on two supports at C and D, where $AC = DB = d$, as shown in Figure 1. The centre of mass of the rod is at the point G. A particle of mass $\frac{5}{2}m$ is placed on the rod at B and the rod is on the point of tipping about D.

(a) Show that $GD = \frac{5}{2}d$.

(4)

The particle is moved from B to the mid-point of the rod and the rod remains in equilibrium.

(b) Find the magnitude of the normal reaction between the support at D and the rod.

(5)

EXPERT TUITION

Leave blank

Question 18 continued

(Total 9 marks)

EXPERT TUITION

Leave blank

19. A plank PQR, of length 8 m and mass 20 kg, is in equilibrium in a horizontal position on two supports at P and Q, where $PQ = 6$ m.

A child of mass 40 kg stands on the plank at a distance of 2 m from P and a block of mass M kg is placed on the plank at the end R. The plank remains horizontal and in equilibrium. The force exerted on the plank by the support at P is equal to the force exerted on the plank by the support at Q.

By modelling the plank as a uniform rod, and the child and the block as particles,

(a) (i) find the magnitude of the force exerted on the plank by the support at P,

(ii) find the value of M.

(10)

(b) State how, in your calculations, you have used the fact that the child and the block can be modelled as particles.

(1)

EXPERT TUITION

Leave blank

Question 19 continued

(Total 11 marks)

EXPERT TUITION

Leave blank

20.

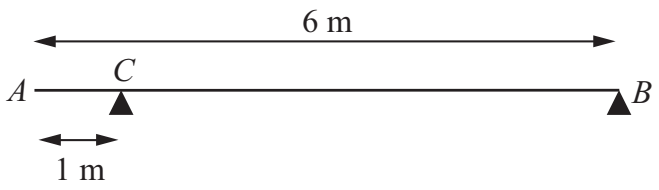

Figure 1

A uniform beam AB has mass 20 kg and length 6 m. The beam rests in equilibrium in a horizontal position on two smooth supports. One support is at C, where $AC = 1$ m, and the other is at the end B, as shown in Figure 1. The beam is modelled as a rod.

(a) Find the magnitudes of the reactions on the beam at B and at C.

(5)

A boy of mass 30 kg stands on the beam at the point D. The beam remains in equilibrium. The magnitudes of the reactions on the beam at B and at C are now equal. The boy is modelled as a particle.

(b) Find the distance AD.

(5)

EXPERT TUITION

Leave blank

Question 20 continued

(Total 10 marks)

EXPERT TUITION

Leave blank

21. A beam AB has length 6 m and weight 200 N. The beam rests in a horizontal position on two supports at the points C and D, where $AC = 1\text{ m}$ and $DB = 1\text{ m}$. Two children, Sophie and Tom, each of weight 500 N, stand on the beam with Sophie standing twice as far from the end B as Tom. The beam remains horizontal and in equilibrium and the magnitude of the reaction at D is three times the magnitude of the reaction at C. By modelling the beam as a uniform rod and the two children as particles, find how far Tom is standing from the end B.

(7)

(Total 7 marks)

EXPERT TUITION

Leave blank

22.

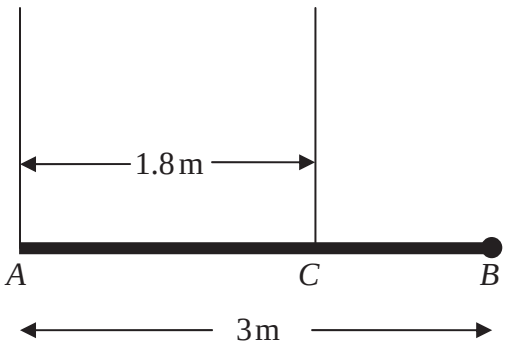

Figure 2

A pole AB has length 3 m and weight W newtons. The pole is held in a horizontal position in equilibrium by two vertical ropes attached to the pole at the points A and C where $AC = 1.8$ m, as shown in Figure 2. A load of weight 20 N is attached to the rod at B. The pole is modelled as a uniform rod, the ropes as light inextensible strings and the load as a particle.

(a) Show that the tension in the rope attached to the pole at C is $\left(\frac{5}{6}W + \frac{100}{3}\right)$ N.

(4)

(b) Find, in terms of W, the tension in the rope attached to the pole at A.

(3)

Given that the tension in the rope attached to the pole at C is eight times the tension in the rope attached to the pole at A,

(c) find the value of W.

(3)

EXPERT TUITION

Leave blank

Question 22 continued

(Total 10 marks)

EXPERT TUITION

Leave blank

23.

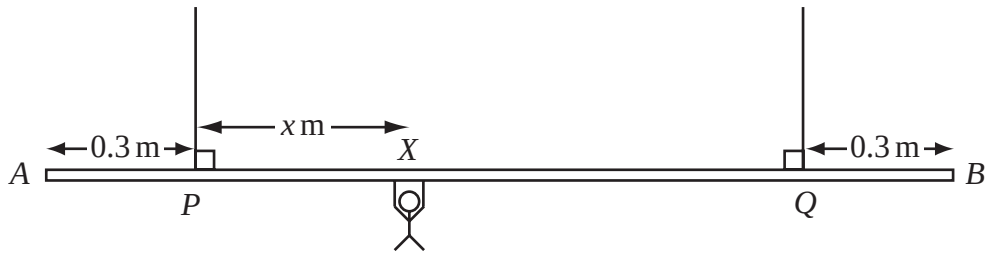

Figure 2

A beam AB is supported by two vertical ropes, which are attached to the beam at points P and Q, where $AP = 0.3$ m and $BQ = 0.3$ m. The beam is modelled as a uniform rod, of length 2 m and mass 20 kg. The ropes are modelled as light inextensible strings. A gymnast of mass 50 kg hangs on the beam between P and Q. The gymnast is modelled as a particle attached to the beam at the point X, where $PX = x$ m, $0 < x < 1.4$ as shown in Figure 2. The beam rests in equilibrium in a horizontal position.

(a) Show that the tension in the rope attached to the beam at P is $(588 - 350x)$ N.

(3)

(b) Find, in terms of x, the tension in the rope attached to the beam at Q.

(3)

(c) Hence find, justifying your answer carefully, the range of values of the tension which could occur in each rope.

(3)

Given that the tension in the rope attached at Q is three times the tension in the rope attached at P,

(d) find the value of x.

(3)

EXPERT TUITION

Leave blank

Question 23 continued

(Total 12 marks)

EXPERT TUITION

Leave blank

24.

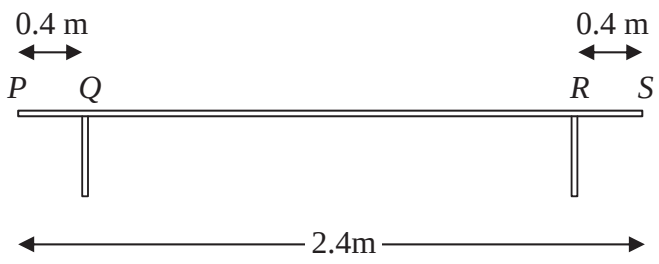

Figure 1

A bench consists of a plank which is resting in a horizontal position on two thin vertical legs. The plank is modelled as a uniform rod *PS* of length 2.4 m and mass 20 kg. The legs at *Q* and *R* are 0.4 m from each end of the plank, as shown in Figure 1.

Two pupils, Arthur and Beatrice, sit on the plank. Arthur has mass 60 kg and sits at the middle of the plank and Beatrice has mass 40 kg and sits at the end *P*. The plank remains horizontal and in equilibrium. By modelling the pupils as particles, find

(a) the magnitude of the normal reaction between the plank and the leg at *Q* and the magnitude of the normal reaction between the plank and the leg at *R*.

(7)

Beatrice stays sitting at *P* but Arthur now moves and sits on the plank at the point *X*. Given that the plank remains horizontal and in equilibrium, and that the magnitude of the normal reaction between the plank and the leg at *Q* is now twice the magnitude of the normal reaction between the plank and the leg at *R*,

(b) find the distance *QX*.

(6)

EXPERT TUITION

Leave blank

Question 24 continued

(Total 13 marks)

EXPERT TUITION

Leave blank

25.

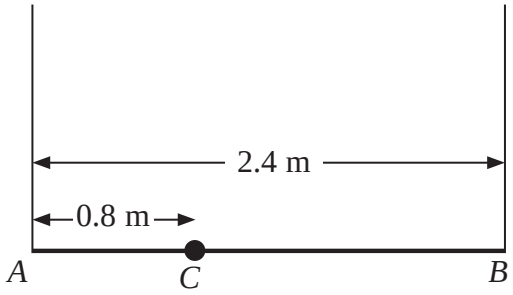

Figure 2

A plank AB has mass 12 kg and length 2.4 m. A load of mass 8 kg is attached to the plank at the point C, where $AC = 0.8$ m. The loaded plank is held in equilibrium, with AB horizontal, by two vertical ropes, one attached at A and the other attached at B, as shown in Figure 2. The plank is modelled as a uniform rod, the load as a particle and the ropes as light inextensible strings.

(a) Find the tension in the rope attached at B.

(4)

The plank is now modelled as a non-uniform rod. With the new model, the tension in the rope attached at A is 10 N greater than the tension in the rope attached at B.

(b) Find the distance of the centre of mass of the plank from A.

(6)

EXPERT TUITION

Leave blank

Question 25 continued

(Total 10 marks)

EXPERT TUITION

Leave blank

26.

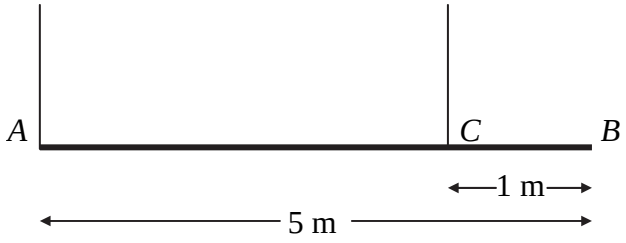

Figure 2

A beam AB has mass 12 kg and length 5 m. It is held in equilibrium in a horizontal position by two vertical ropes attached to the beam. One rope is attached to A, the other to the point C on the beam, where $BC = 1$ m, as shown in Figure 2. The beam is modelled as a uniform rod, and the ropes as light strings.

(a) Find

(i) the tension in the rope at C,

(ii) the tension in the rope at A.

(5)

A small load of mass 16 kg is attached to the beam at a point which is y metres from A. The load is modelled as a particle. Given that the beam remains in equilibrium in a horizontal position,

(b) find, in terms of y, an expression for the tension in the rope at C.

(3)

The rope at C will break if its tension exceeds 98 N. The rope at A cannot break.

(c) Find the range of possible positions on the beam where the load can be attached without the rope at C breaking.

(3)

EXPERT TUITION

Leave blank

Question 26 continued

(Total 11 marks)

EXPERT TUITION

Leave blank

27.

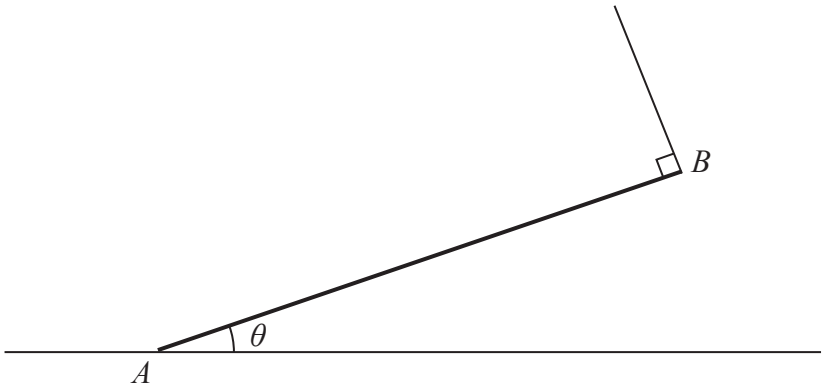

Figure 3

A uniform rod AB, of mass m and length $2a$, rests with its end A on rough horizontal ground. The rod is held in limiting equilibrium at an angle θ to the horizontal by a light string attached to the rod at B, as shown in Figure 3. The string is perpendicular to the rod and lies in the same vertical plane as the rod.

The coefficient of friction between the ground and the rod is μ.

Show that $\mu = \dfrac{\cos\theta \sin\theta}{2 - \cos^2\theta}$

(10)

EXPERT TUITION

Leave blank

Question 27 continued

EXPERT TUITION

Leave blank

Question 27 continued

EXPERT TUITION

Leave blank

Question 27 continued

(Total 10 marks)

EXPERT TUITION

Leave blank

28.

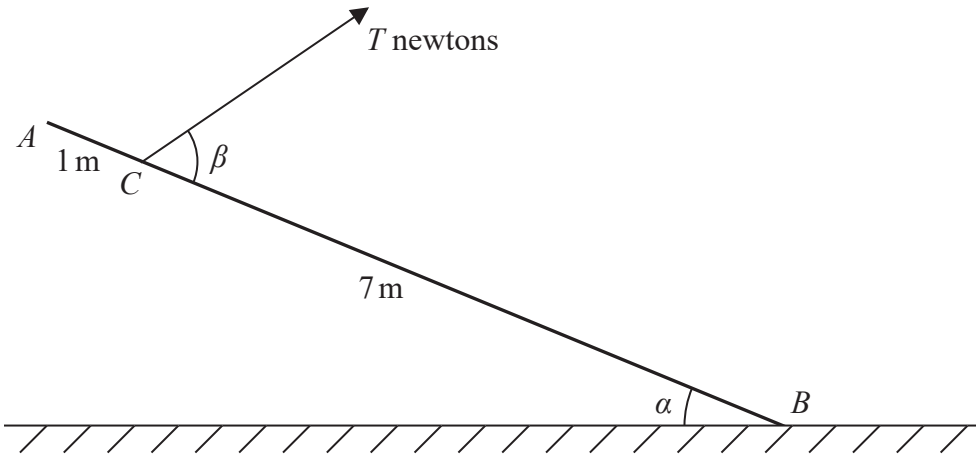

Figure 3

A uniform rod AB, of mass 5 kg and length 8 m, has its end B resting on rough horizontal ground. The rod is held in limiting equilibrium at an angle α to the horizontal, where $\tan\alpha = \frac{3}{4}$, by a rope attached to the rod at C. The distance $AC = 1$ m. The rope is in the same vertical plane as the rod. The angle between the rope and the rod is β and the tension in the rope is T newtons, as shown in Figure 3. The coefficient of friction between the rod and the ground is $\frac{2}{3}$. The vertical component of the force exerted on the rod at B by the ground is R newtons.

(a) Find the value of R.

(6)

(b) Find the size of angle β.

(5)

EXPERT TUITION

Leave blank

Question 28 continued

EXPERT TUITION

Leave blank

Question 28 continued

EXPERT TUITION

Leave blank

Question 28 continued

(Total 11 marks)

EXPERT TUITION

Leave blank

29.

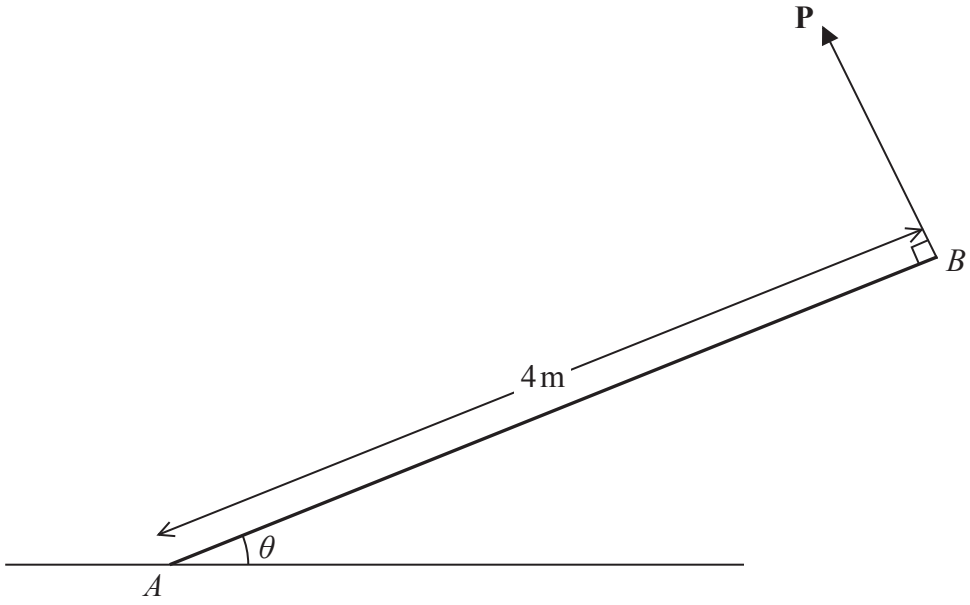

Figure 2

A non-uniform rod AB, of mass 5 kg and length 4 m, rests with one end A on rough horizontal ground. The centre of mass of the rod is d metres from A. The rod is held in limiting equilibrium at an angle θ to the horizontal by a force **P**, which acts in a direction perpendicular to the rod at B, as shown in Figure 2. The line of action of **P** lies in the same vertical plane as the rod.

(a) Find, in terms of d, g and θ,

(i) the magnitude of the vertical component of the force exerted on the rod by the ground,

(ii) the magnitude of the friction force acting on the rod at A.

(8)

Given that $\tan\theta = \frac{5}{12}$ and that the coefficient of friction between the rod and the ground is $\frac{1}{2}$,

(b) find the value of d.

(4)

EXPERT TUITION

Leave blank

Question 29 continued

EXPERT TUITION

Leave blank

Question 29 continued

EXPERT TUITION

Leave blank

Question 29 continued

(Total 12 marks)

EXPERT TUITION

Leave blank

30. A ladder AB, of weight W and length $2l$, has one end A resting on rough horizontal ground. The other end B rests against a rough vertical wall. The coefficient of friction between the ladder and the wall is $\frac{1}{3}$. The coefficient of friction between the ladder and the ground is μ. Friction is limiting at both A and B. The ladder is at an angle θ to the ground, where $\tan\theta = \frac{5}{3}$. The ladder is modelled as a uniform rod which lies in a vertical plane perpendicular to the wall.

Find the value of μ.

(9)

EXPERT TUITION

Leave blank

Question 30 continued

EXPERT TUITION

Leave blank

Question 30 continued

EXPERT TUITION

Leave blank

Question 30 continued

(Total 9 marks)

EXPERT TUITION

Leave blank

31.

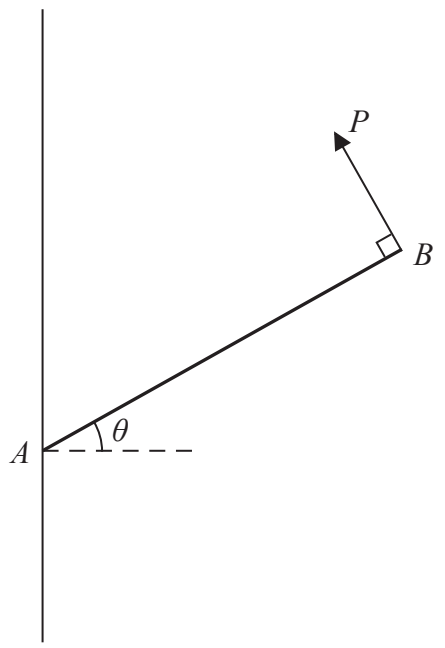

Figure 3

A uniform rod AB of weight W has its end A freely hinged to a point on a fixed vertical wall. The rod is held in equilibrium, at angle θ to the horizontal, by a force of magnitude P. The force acts perpendicular to the rod at B and in the same vertical plane as the rod, as shown in Figure 3. The rod is in a vertical plane perpendicular to the wall. The magnitude of the vertical component of the force exerted on the rod by the wall at A is Y.

(a) Show that $Y = \frac{W}{2}(2 - \cos^2\theta)$.

(6)

Given that $\theta = 45°$

(b) find the magnitude of the force exerted on the rod by the wall at A, giving your answer in terms of W.

(6)

EXPERT TUITION

Leave blank

Question 31 continued

EXPERT TUITION

Leave blank

Question 31 continued

EXPERT TUITION

Leave blank

Question 31 continued

(Total 12 marks)

EXPERT TUITION

Leave blank

32.

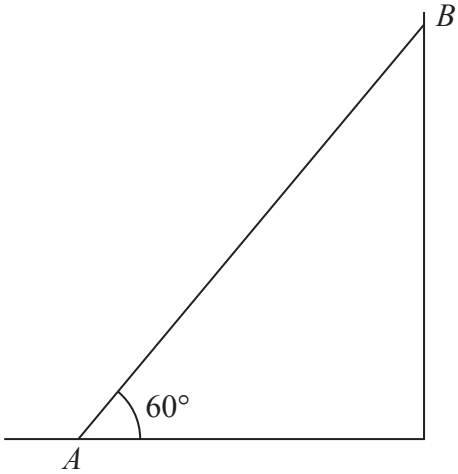

Figure 1

A non-uniform rod, AB, of mass m and length $2l$, rests in equilibrium with one end A on a rough horizontal floor and the other end B against a rough vertical wall. The rod is in a vertical plane perpendicular to the wall and makes an angle of 60° with the floor as shown in Figure 1. The coefficient of friction between the rod and the floor is $\frac{1}{4}$ and the coefficient of friction between the rod and the wall is $\frac{2}{3}$. The rod is on the point of slipping at both ends.

(a) Find the magnitude of the vertical component of the force exerted on the rod by the floor.

(5)

The centre of mass of the rod is at G.

(b) Find the distance AG.

(5)

EXPERT TUITION

Leave blank

Question 32 continued

EXPERT TUITION

Leave blank

Question 32 continued

EXPERT TUITION

Leave blank

Question 32 continued

(Total 10 marks)

EXPERT TUITION

Leave blank

33.

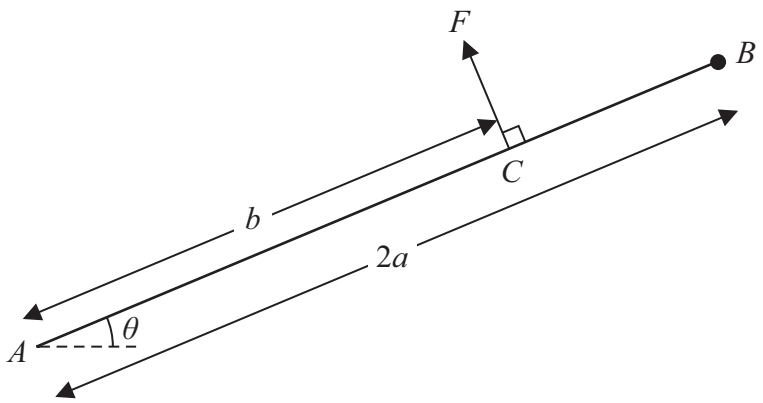

Figure 3

A uniform rod AB, of mass m and length $2a$, is freely hinged to a fixed point A. A particle of mass m is attached to the rod at B. The rod is held in equilibrium at an angle θ to the horizontal by a force of magnitude F acting at the point C on the rod, where $AC = b$, as shown in Figure 3. The force at C acts at right angles to AB and in the vertical plane containing AB.

(a) Show that $F = \dfrac{3amg\cos\theta}{b}$.

(4)

(b) Find, in terms of a, b, g, m and θ,

(i) the horizontal component of the force acting on the rod at A,

(ii) the vertical component of the force acting on the rod at A.

(5)

Given that the force acting on the rod at A acts along the rod,

(c) find the value of $\dfrac{a}{b}$.

(4)

EXPERT TUITION

Leave blank

Question 33 continued

EXPERT TUITION

Leave blank

Question 33 continued

EXPERT TUITION

Leave blank

Question 33 continued

(Total 13 marks)

EXPERT TUITION

Leave blank

34. A rough circular cylinder of radius $4a$ is fixed to a rough horizontal plane with its axis horizontal. A uniform rod AB, of weight W and length $6a\sqrt{3}$, rests with its lower end A on the plane and a point C of the rod against the cylinder. The vertical plane through the rod is perpendicular to the axis of the cylinder. The rod is inclined at 60° to the horizontal, as shown in Figure 1.

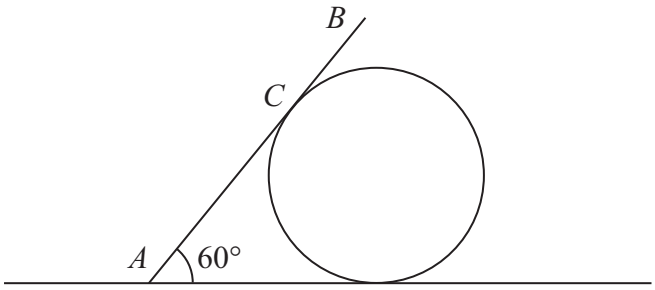

Figure 1

(a) Show that $AC = 4a\sqrt{3}$

(2)

The coefficient of friction between the rod and the cylinder is $\frac{\sqrt{3}}{3}$ and the coefficient of friction between the rod and the plane is μ. Given that friction is limiting at both A and C,

(b) find the value of μ.

(9)

EXPERT TUITION

Leave blank

Question 34 continued

EXPERT TUITION

Leave blank

Question 34 continued

EXPERT TUITION

Leave blank

Question 34 continued

(Total 11 marks)

EXPERT TUITION

Leave blank

35.

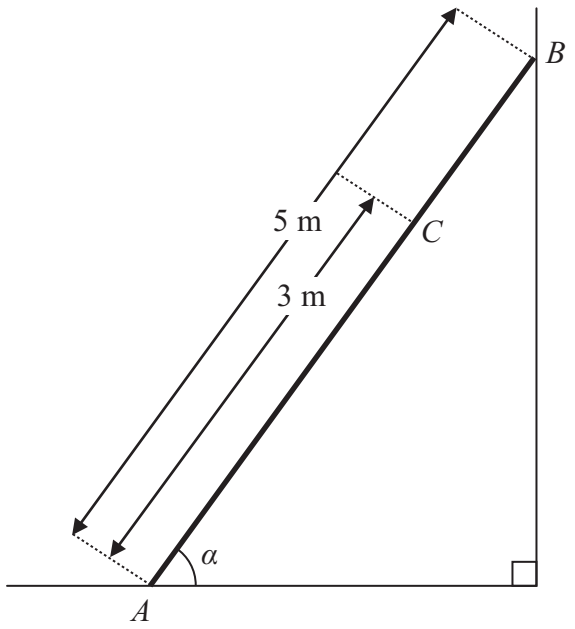

Figure 1

A ladder, of length 5 m and mass 18 kg, has one end A resting on rough horizontal ground and its other end B resting against a smooth vertical wall. The ladder lies in a vertical plane perpendicular to the wall and makes an angle α with the horizontal ground, where $\tan \alpha = \frac{4}{3}$, as shown in Figure 1. The coefficient of friction between the ladder and the ground is μ. A woman of mass 60 kg stands on the ladder at the point C, where $AC = 3$ m. The ladder is on the point of slipping. The ladder is modelled as a uniform rod and the woman as a particle.

Find the value of μ.

(9)

EXPERT TUITION

Leave blank

Question 35 continued

EXPERT TUITION

Leave blank

Question 35 continued

EXPERT TUITION

Leave blank

Question 35 continued

(Total 9 marks)

EXPERT TUITION

Leave blank

36.

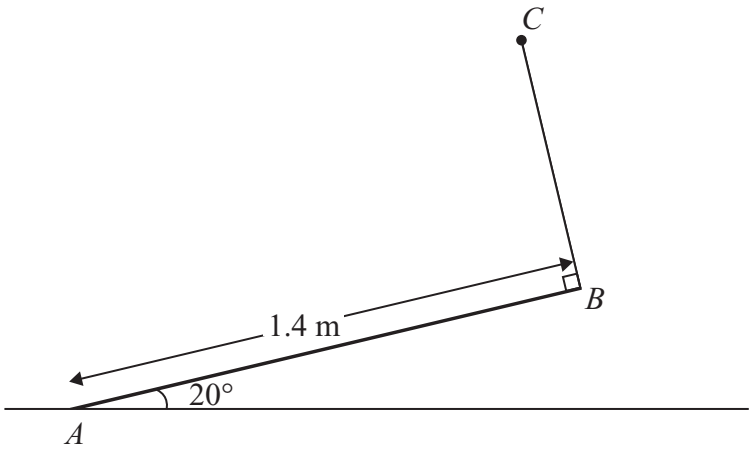

Figure 2

A uniform rod AB has mass 4 kg and length 1.4 m. The end A is resting on rough horizontal ground. A light string BC has one end attached to B and the other end attached to a fixed point C. The string is perpendicular to the rod and lies in the same vertical plane as the rod. The rod is in equilibrium, inclined at 20° to the ground, as shown in Figure 2.

(a) Find the tension in the string.

(4)

Given that the rod is about to slip,

(b) find the coefficient of friction between the rod and the ground.

(7)

EXPERT TUITION

Leave blank

Question 36 continued

EXPERT TUITION

Leave blank

Question 36 continued

EXPERT TUITION

Leave blank

Question 36 continued

(Total 11 marks)

EXPERT TUITION

Leave blank

37.

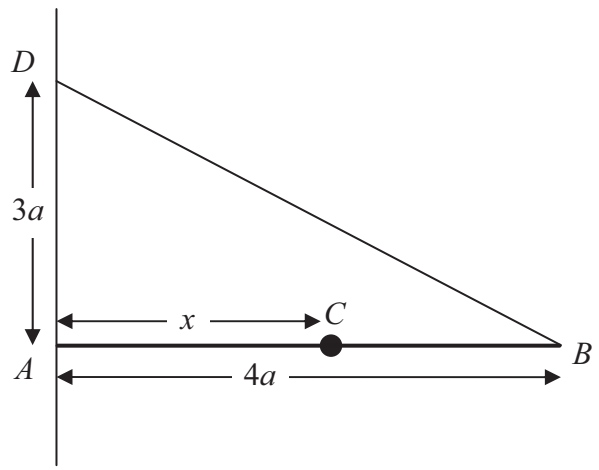

Figure 3

A uniform rod AB, of mass $3m$ and length $4a$, is held in a horizontal position with the end A against a rough vertical wall. One end of a light inextensible string BD is attached to the rod at B and the other end of the string is attached to the wall at the point D vertically above A, where $AD = 3a$. A particle of mass $3m$ is attached to the rod at C, where $AC = x$. The rod is in equilibrium in a vertical plane perpendicular to the wall as shown in Figure 3. The tension in the string is $\frac{25}{4}mg$.

Show that

(a) $x = 3a$,

(5)

(b) the horizontal component of the force exerted by the wall on the rod has magnitude $5mg$.

(3)

The coefficient of friction between the wall and the rod is μ. Given that the rod is about to slip,

(c) find the value of μ.

(5)

EXPERT TUITION

Leave blank

Question 37 continued

EXPERT TUITION

Leave blank

Question 37 continued

EXPERT TUITION

Leave blank

Question 37 continued

(Total 13 marks)

EXPERT TUITION

Leave blank

38.

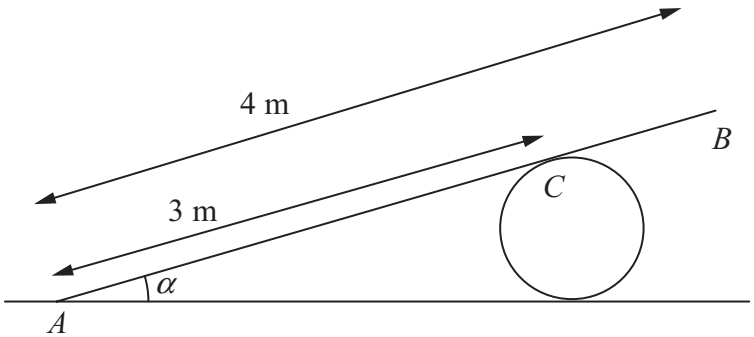

Figure 4

A uniform plank AB, of weight 100 N and length 4 m, rests in equilibrium with the end A on rough horizontal ground. The plank rests on a smooth cylindrical drum. The drum is fixed to the ground and cannot move. The point of contact between the plank and the drum is C, where $AC = 3$ m, as shown in Figure 4. The plank is resting in a vertical plane which is perpendicular to the axis of the drum, at an angle α to the horizontal, where $\sin\alpha = \frac{1}{3}$. The coefficient of friction between the plank and the ground is μ. Modelling the plank as a rod, find the least possible value of μ.

(10)

EXPERT TUITION

Leave blank

Question 38 continued

EXPERT TUITION

Leave blank

Question 38 continued

EXPERT TUITION

Leave blank

Question 38 continued

(Total 10 marks)

EXPERT TUITION

Leave blank

39.

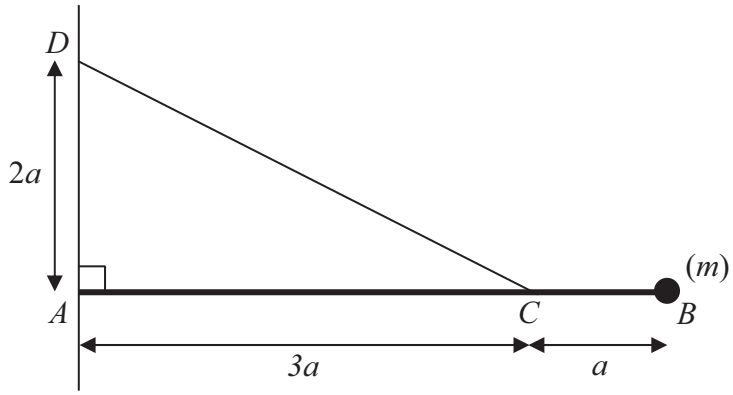

Figure 2

Figure 2 shows a uniform rod AB of mass m and length $4a$. The end A of the rod is freely hinged to a point on a vertical wall. A particle of mass m is attached to the rod at B. One end of a light inextensible string is attached to the rod at C, where $AC = 3a$. The other end of the string is attached to the wall at D, where $AD = 2a$ and D is vertically above A. The rod rests horizontally in equilibrium in a vertical plane perpendicular to the wall and the tension in the string is T.

(a) Show that $T = mg\sqrt{13}$.

(5)

The particle of mass m at B is removed from the rod and replaced by a particle of mass M which is attached to the rod at B. The string breaks if the tension exceeds $2mg\sqrt{13}$. Given that the string does not break,

(b) show that $M \leqslant \frac{5}{2}m$.

(3)

EXPERT TUITION

Leave blank

Question 39 continued

EXPERT TUITION

Leave blank

Question 39 continued

EXPERT TUITION

Leave blank

Question 39 continued

(Total 8 marks)

EXPERT TUITION

Leave blank

40.

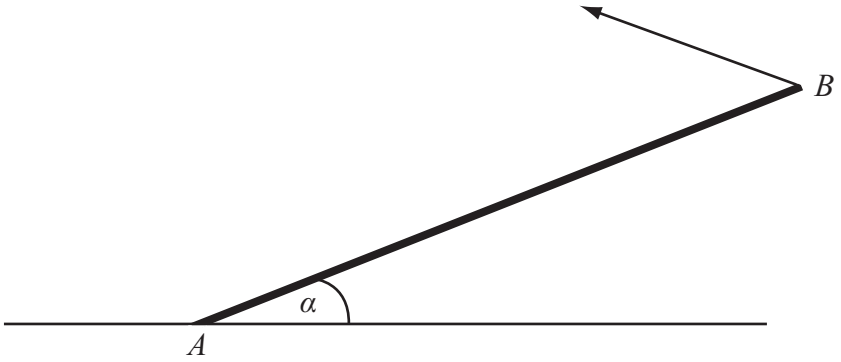

Figure 2

A uniform rod AB, of mass 20 kg and length 4 m, rests with one end A on rough horizontal ground. The rod is held in limiting equilibrium at an angle α to the horizontal, where $\tan \alpha = \frac{3}{4}$, by a force acting at B, as shown in Figure 2. The line of action of this force lies in the vertical plane which contains the rod. The coefficient of friction between the ground and the rod is 0.5. Find the magnitude of the normal reaction of the ground on the rod at A.

(7)

EXPERT TUITION

Leave blank

Question 40 continued

EXPERT TUITION

Leave blank

Question 40 continued

EXPERT TUITION

Leave blank

Question 40 continued

(Total 7 marks)

EXPERT TUITION

Leave blank

41.

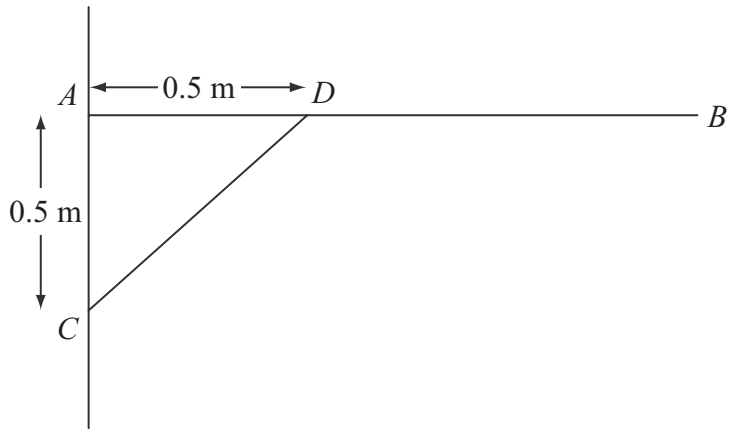

Figure 1

A uniform rod AB, of length 1.5 m and mass 3 kg, is smoothly hinged to a vertical wall at A. The rod is held in equilibrium in a horizontal position by a light strut CD as shown in Figure 1. The rod and the strut lie in the same vertical plane, which is perpendicular to the wall. The end C of the strut is freely jointed to the wall at a point 0.5 m vertically below A. The end D is freely joined to the rod so that AD is 0.5 m.

(a) Find the thrust in CD.

(4)

(b) Find the magnitude and direction of the force exerted on the rod AB at A.

(7)

EXPERT TUITION

Leave blank

Question 41 continued

EXPERT TUITION

Leave blank

Question 41 continued

EXPERT TUITION

Leave blank

Question 41 continued

(Total 11 marks)

EXPERT TUITION

Leave blank

42.

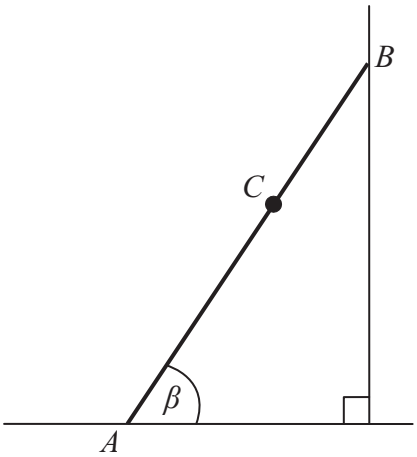

Figure 1

Figure 1 shows a ladder AB, of mass 25 kg and length 4 m, resting in equilibrium with one end A on rough horizontal ground and the other end B against a smooth vertical wall. The ladder is in a vertical plane perpendicular to the wall. The coefficient of friction between the ladder and the ground is $\frac{11}{25}$. The ladder makes an angle β with the ground. When Reece, who has mass 75 kg, stands at the point C on the ladder, where $AC = 2.8$ m, the ladder is on the point of slipping. The ladder is modelled as a uniform rod and Reece is modelled as a particle.

(a) Find the magnitude of the frictional force of the ground on the ladder.

(3)

(b) Find, to the nearest degree, the value of β.

(6)

(c) State how you have used the modelling assumption that Reece is a particle.

(1)

EXPERT TUITION

Leave blank

Question 42 continued

EXPERT TUITION

Leave blank

Question 42 continued

EXPERT TUITION

Leave blank

Question 42 continued

(Total 10 marks)

EXPERT TUITION

Leave blank

43.

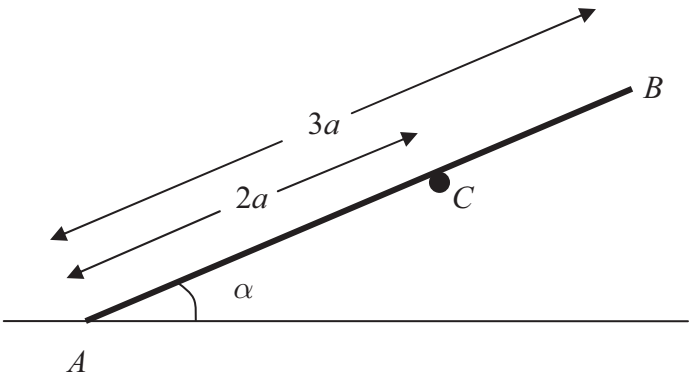

Figure 2

A plank rests in equilibrium against a fixed horizontal pole. The plank is modelled as a uniform rod AB and the pole as a smooth horizontal peg perpendicular to the vertical plane containing AB. The rod has length $3a$ and weight W and rests on the peg at C, where $AC = 2a$. The end A of the rod rests on rough horizontal ground and AB makes an angle α with the ground, as shown in Figure 2.

(a) Show that the normal reaction on the rod at A is $\frac{1}{4}(4 - 3\cos^2 \alpha)\, W$.

(6)

Given that the rod is in limiting equilibrium and that $\cos \alpha = \frac{2}{3}$,

(b) find the coefficient of friction between the rod and the ground.

(5)

EXPERT TUITION

Leave blank

Question 43 continued

EXPERT TUITION

Leave blank

Question 43 continued

EXPERT TUITION

Leave blank

Question 43 continued

(Total 11 marks)

EXPERT TUITION

Leave blank

44.

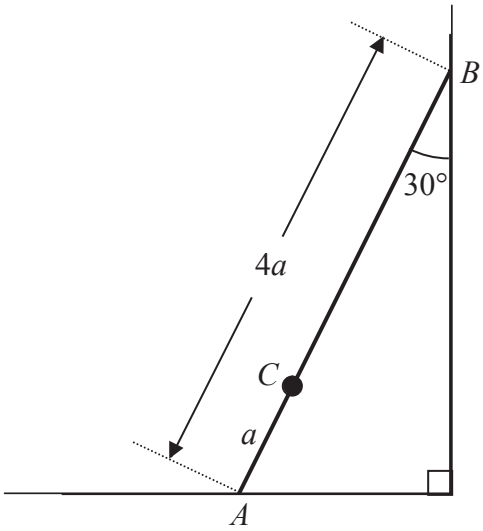

Figure 2

A ladder AB, of mass m and length $4a$, has one end A resting on rough horizontal ground. The other end B rests against a smooth vertical wall. A load of mass $3m$ is fixed on the ladder at the point C, where $AC = a$. The ladder is modelled as a uniform rod in a vertical plane perpendicular to the wall and the load is modelled as a particle. The ladder rests in limiting equilibrium making an angle of 30° with the wall, as shown in Figure 2.

Find the coefficient of friction between the ladder and the ground.

(10)

EXPERT TUITION

Leave blank

Question 44 continued

(Total 10 marks)

EXPERT TUITION